REVISION HISTORY			
REV.	DESCRIPTION	DATE	DRAWN BY
1	ORIGINAL PRINT	11/01/2015	A. BAKER
2	DRAWN TO MEET AMDS-1	5/16/2018	B. HODSON

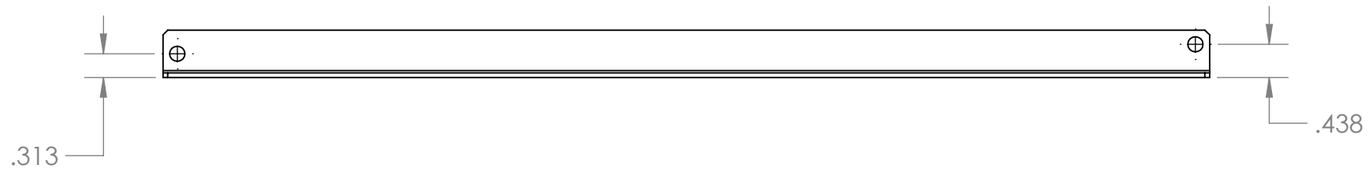

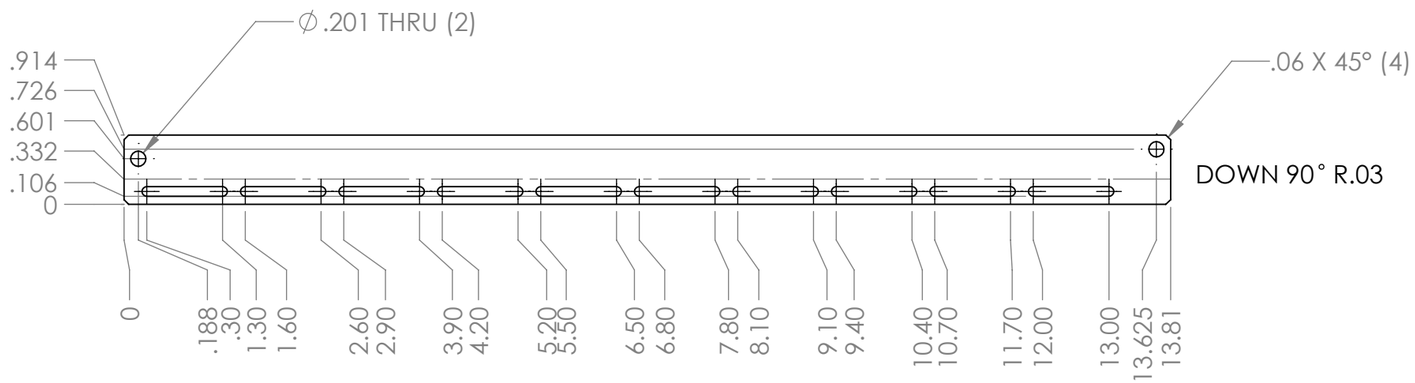

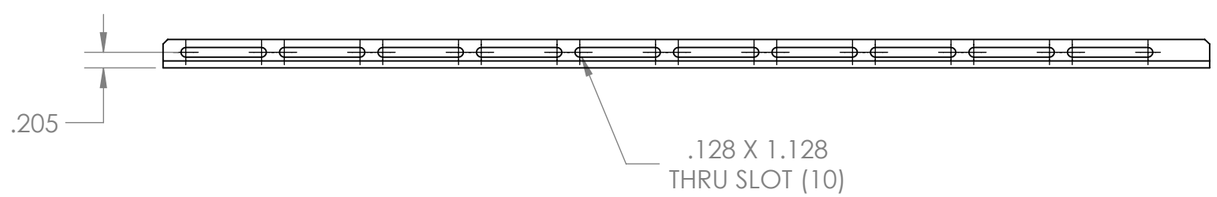

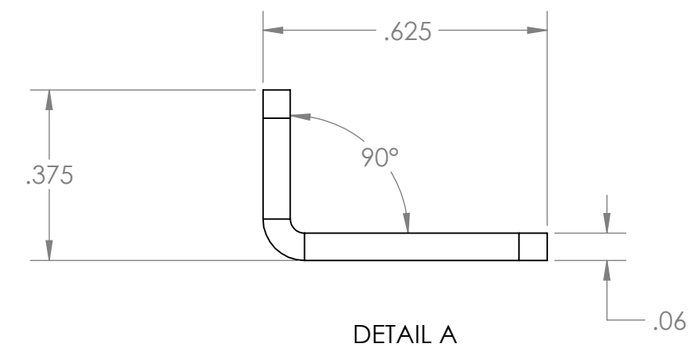

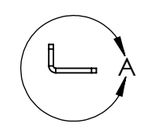

DETAIL A
SCALE 3 : 1

*** SEE CAD FOR ADDITIONAL TOOLPATH INFO***

UNLESS OTHERWISE SPECIFIED:	COMMENTS:
DIMENSIONS ARE IN INCHES	DUAL DIMENSIONS ARE IN MILLIMETERS.
TOLERANCES: FRACTIONAL ±1/16 ANGULAR: MACH ±1° ANGULAR: BEND ±5° ONE PLACE DECIMAL ±0.1 TWO PLACE DECIMAL ±0.01 THREE PLACE DECIMAL ±0.005 FOUR PLACE DECIMAL ±0.0005	BREAK ALL SHARP EDGES.
MATERIAL 5052 ALUMINUM	
FINISH TUMBLED	
DO NOT SCALE DRAWING	

	NAME	DATE
CHECKED	NL	6/25/18
ENG APPR.		
MFG APPR.		
Q.A.		

AndyMark

TITLE:

DART 12IN SENSOR BRACKET

SIZE	DWG. NO.	REV
B	am-3252	2

SCALE: 1:2 SHEET 1 OF 1